Genuine Accessories

Vehicle Model: Tucson

Model Year 2022~
Part No. P0F12 AC121

Language English
Rev. Date 8/16/2021

Accessory: Cargo Net

Difficulty: (A)

Note: Difficulty stated above reflects the minimum level of expertise required to install the accessory:
(A) Customer
(B) Dealer Technician
(C) Master Technician or Specialist

Electronic Installation Instructions

If this is a printed copy of the installation instructions, ensure you have the latest revision by scanning the QR code or by entering the website address listed below before beginning installation. Use the latest revision date as noted by "Rev. Date" above.

www.hyundaiaccessories.com/admin_media_uploads/installationSheets/p0f12_ac121.pdf

Application Notes

Only Applies to Tucson PHEV Models

Instructional Symbols / Definitions

Denotes warnings that may lead to serious physical injury or vehicle damage

Denotes cautions to be taken to avoid physical injury or electronic component damage

Denotes cautions to be taken to avoid vehicle and component damage

Denotes quality processes to be checked prior to moving to the next step

Denotes specific tools that are necessary to complete a step

NOTE

Denotes important information to be reviewed during the step

Denotes personal protective equipment (PPEs) that may be required for a step. Examples of safety equipment icons noted below:

Glasses

Gloves

Mask

Hearing Protection

Basic Required Tools

None

Part Weight (Gross)

1.00	**lbs**
0.45	**kg**

FMVSS 110 Compliance Information

All dealers must determine if the Net weight they have added in the form of all options or accessories, when added to the weight of all Port/Dealer Installed options or accessories, exceeds the lesser of 1.5% of GVWR or 100 lbs. If the additional weight does exceed the lesser of the indicated thresholds, a "Load Carrying Capacity Reduced" label must be installed. A black, fine-point, indelible marker must be used to write by hand onto the label, the reduced carrying capacity in kilograms or pounds, which is the total weight of all added options and accessories.
Load Label Part Number: NP070 - 09003

Notes to the installer:

1) Read the entire Installation Instructions prior to beginning the installation of the part.
2) If applicable, scan the barcode label located on the accessory part or packaging prior to installing, to register the part. If this accessory is installed as a replacement, register the removal of the old part before registering the new part. Old and new parts will have different barcode data, and the old registration cannot be reused.
3) Make sure the vehicle is completely clean and dry in the area(s) the part is to be installed.
4) Ensure the vehicle is properly protected in the area(s) that the accessory is to be installed.
5) NEVER place tools on painted surfaces, seating surfaces, dash pad, console or floor carpet/mats.
6) Always wear appropriate personal protective equipment, including gloves, safety glasses, etc., when required.

Kit Overview

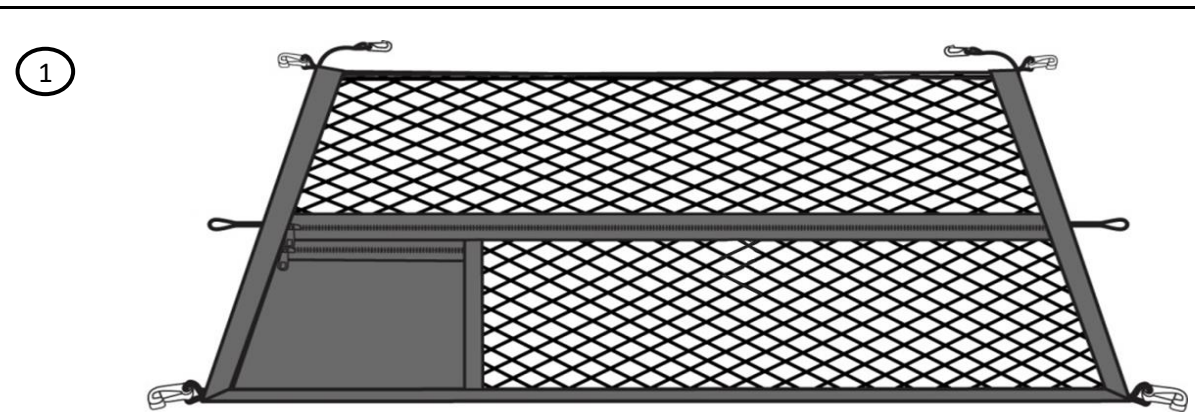

No.	Qty	Description
1	1	Cargo Net

1	

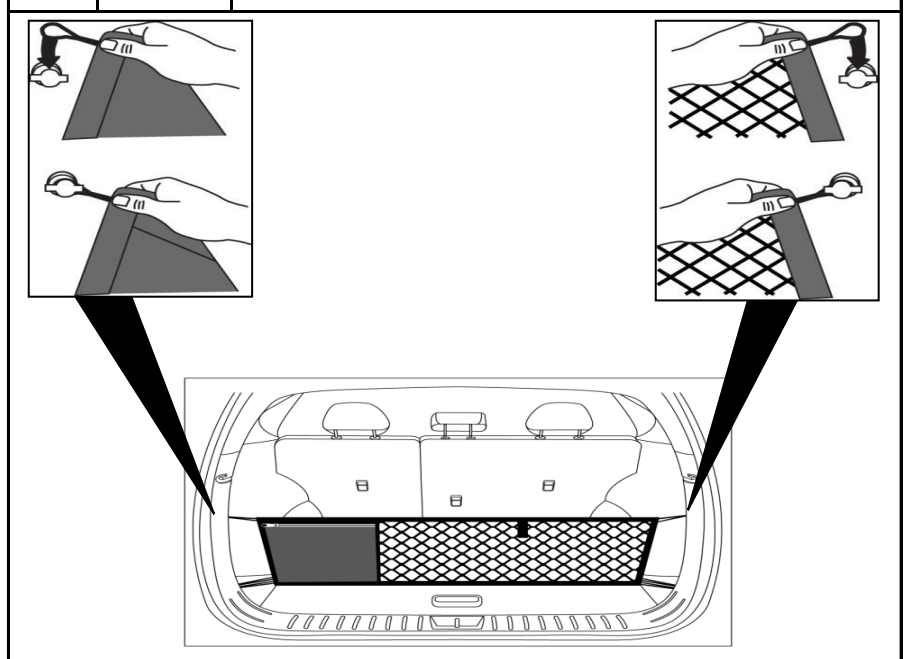

NOTE	A. Open tailgate. B. For upper vertical installation, identify the T-Anchor upper attachment points. C. Orient the Cargo Net with the pouch facing the rear of the vehicle, and attach the upper loops of the Cargo Net to the T-Anchor as shown.
✓	**Ensure upper loops are secure to T-Anchors.**

2	

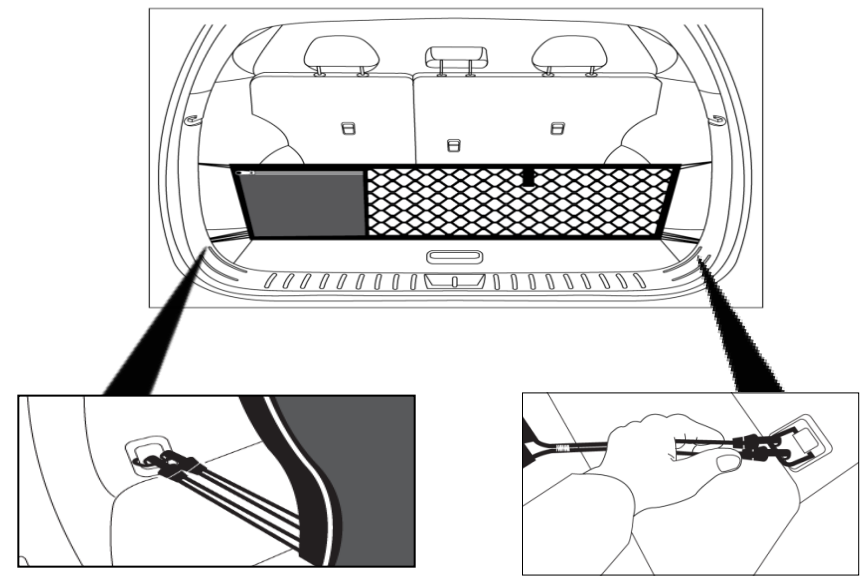

NOTE	A. Attach the two (2) long Hooks per side to the side D-Rings as shown.
✓	**Ensure the four (4) long hooks are secure to D-Rings.**

3	

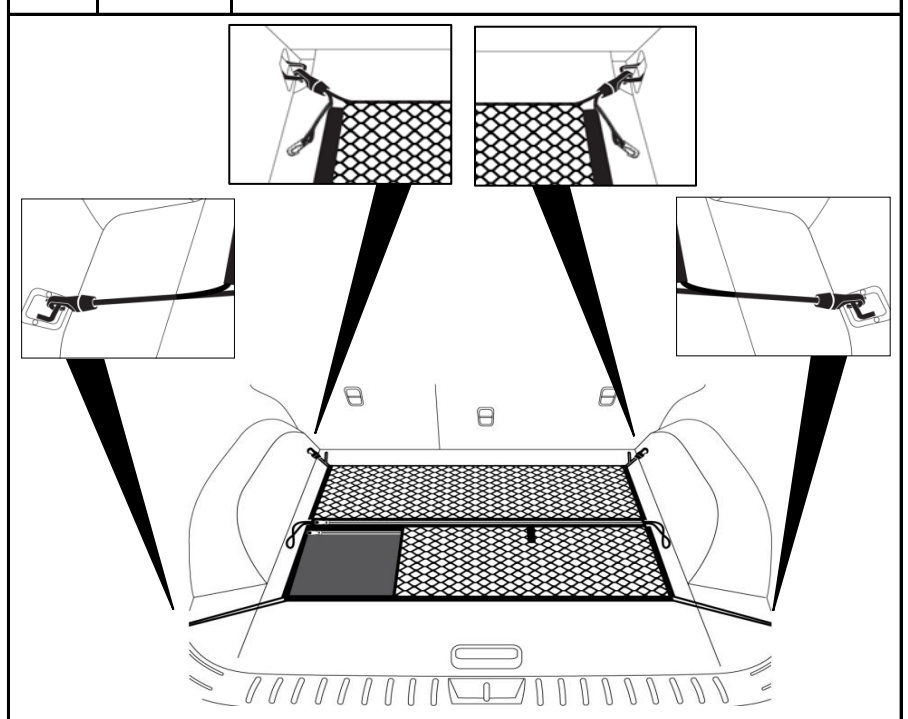

NOTE	A. For horizontal installation, locate the four (4) D-Ring attachment points. B. Position the net as shown above. C. Attach the two (2) hooks to the rear D-Rings as shown. D. Attach the two (2) short hooks to the front D-Rings as shown.
✓	**Ensure hooks are secure to D-Rings.**

Visual Check

	Item to be Checked	Result
✓	Ensure upper loops are secure to T-Anchors (Vertical Position).	Upper loops are secure to T-Anchors (Vertical Position).
✓	Ensure hooks are secure to D-Rings.	Hooks are secure to D-Rings.